SPECIFICATION

IMAGE FORMAT	1/4"
FOCAL LENGTH	1.6mm
F.O.V. (JX-H62)	181°(D=4.45)
	154°(H=3.84)
	84° (V=2.16)
RESOLUTION	MP
TV DISTORTION	<17%
APERTURE	F2.5
MOUNT	M12x0.5
IRIS	Fixed
M.O.D.	0.1m
T.T.L.	13mm
STRUCTURE	4G2P+IRCF
WATERPROOF	IP67

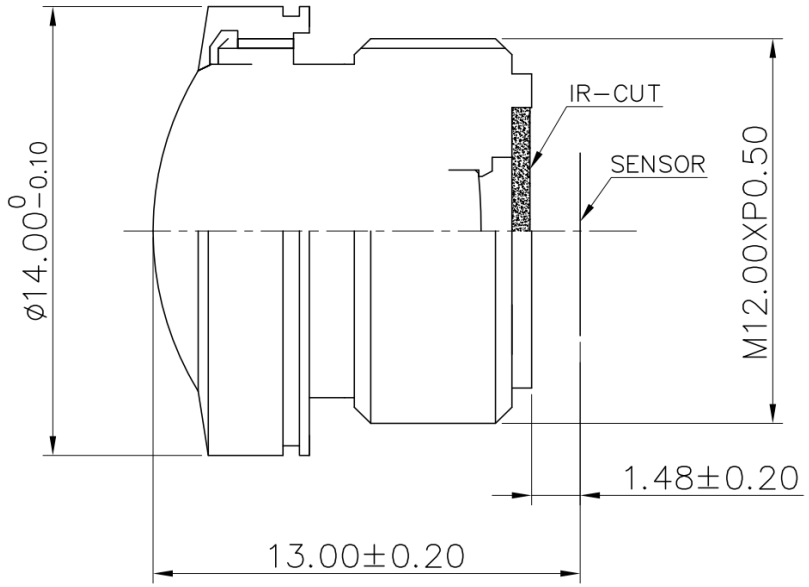

SCALE		DRAWN		MODEL	**S01614015425F**	REV	DESCRIPTION	DATE	NAME
DATE		CHECK		TOWIN 香港致远电子集团有限公司 HONGKONG TOWIN ELECTRONICS CO.,LTD.		①			
UNIT	mm	APPROVE				②			
						③			