SPECIFICATION

IMAGE FORMAT	1/4"
FOCAL LENGTH	1.7 mm
F.O.V.	100°(D)
	85°(H)
	73°(V)
RESOLUTION	5 megapixel
DISTORTION	<1%
APERTURE	F2.4
MOUNT	M12x0.5
IRIS	Fixed
B.F.L.	4 mm
T.T.L.	16.2mm
CONSTRUCTION	4G2P+IRF

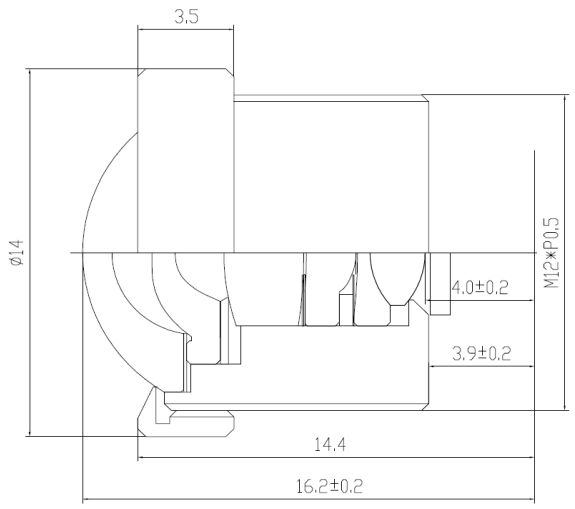

SCALE	4:1	DRAWN		MODEL	**CCL14017MPF**	REV	DESCRIPTION	DATE	NAME
DATE		CHECK		香港致远电子集团有限公司 HONGKONG TOWIN ELECTRONICS CO.,LTD.		①			
UNIT	mm	APPROVE				②			
						③			