SPECIFICATION

IMAGE FORMAT	1/3"
FOCAL LENGTH	25mm
F.O.V.	14°(D)
	11°(H)
	8°(V)
RESOLUTION	3 MP
OPTICAL DISTORTION	<-0.5%
APERTURE	F2.5
MOUNT	M12X0.5
IRIS	Fixed
FOCUS	Manual
ZOOM	Fixed
M.O.D.	0.2m
IR	Corrected

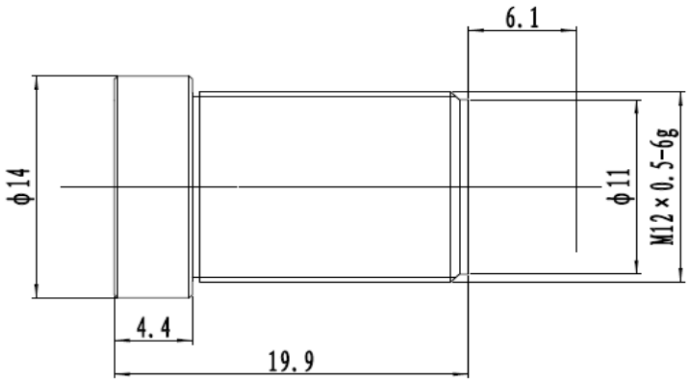

SCALE		DRAWN		MODEL	**CCL132525MP**	REV	DESCRIPTION	DATE	NAME
DATE		CHECK		香港致远电子集团有限公司 HONGKONG TOWIN ELECTRONICS CO.,LTD.		①			
UNIT	mm	APPROVE				②			
						③			