SPECIFICATION

IMAGE FORMAT	1/3"
FOCAL LENGTH	4.5mm
F.O.V.	78°(D)
	63°(H)
	47°(V)
RESOLUTION	Megapixel
APERTURE	F2.2
MOUNT	M12X0.5
IRIS	Fixed
FOCUS	Manual
ZOOM	Fixed
B.F.L.	6.15mm
M.O.D.	0.2m
CONSTRUCTION	4G+IR cut

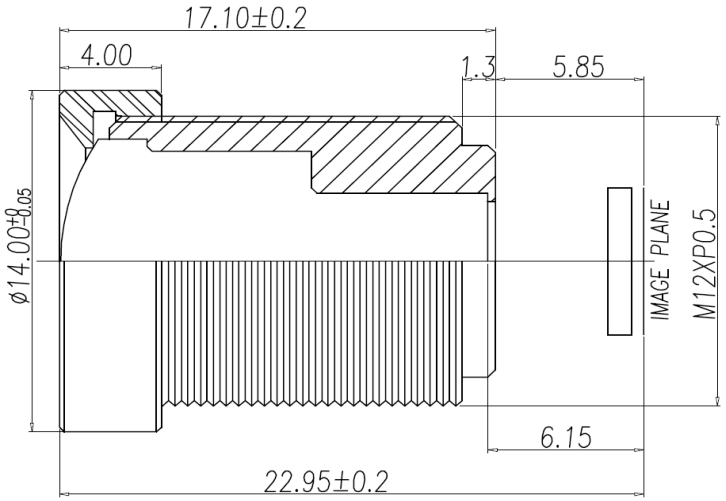

SCALE		DRAWN		MODEL	**CCL13045MP**	REV	DESCRIPTION	DATE	NAME
DATE		CHECK		香港致远电子集团有限公司 HONGKONG TOWIN ELECTRONICS CO.,LTD.		①			
UNIT	mm	APPROVE				②			
						③			