# SPECIFICATION

| | |
|---|---|
| IMAGE FORMAT | 1/3" |
| FOCAL LENGTH | 1.7 mm |
| F.O.V. | 120°(D) |
| | 100°(H) |
| | 85°(V) |
| RESOLUTION | 3 megapixel |
| DISTORTION | <2% |
| APERTURE | F2.4 |
| MOUNT | M12x0.5 |
| IRIS | Fixed |
| B.F.L. | 4 mm |
| T.T.L. | 16.2mm |
| LENS COMPONENT | 4G2P |

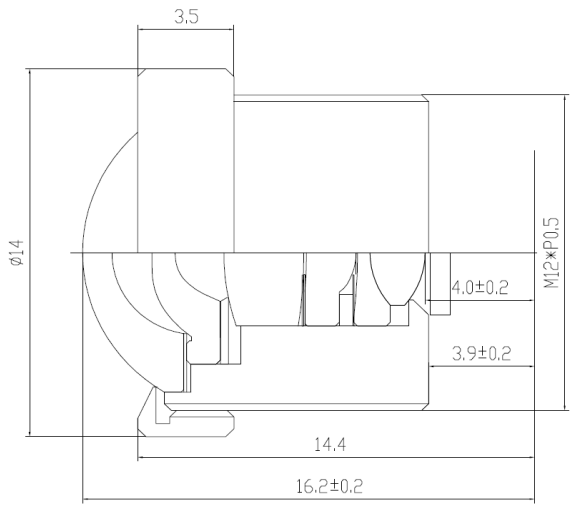


| | | | | | | | | | |
|---|---|---|---|---|---|---|---|---|---|
| SCALE | 4:1 | DRAWN | | MODEL | **CCL13017MPR** | REV | DESCRIPTION | DATE | NAME |
| DATE | | CHECK | | TOWIN 香港致远电子集团有限公司 HONGKONG TOWIN ELECTRONICS CO.,LTD. | | ① | | | |
| UNIT | mm | APPROVE | | | | ② | | | |
| | | | | | | ③ | | | |