SPECIFICATION

IMAGE FORMAT	1/2.8"
FOCAL LENGTH	16mm
F.O.V.	23°(D)
	20°(H)
	13°(V)
RESOLUTION	3MP
DISTORTION	<0.2%
APERTURE	F2.0
MOUNT	M12X0.5
IRIS	Fixed
M.O.D.	0.3m
T.T.L.	21.1mm
B.F.L.	5.75mm
CONSTRUCTION	6G

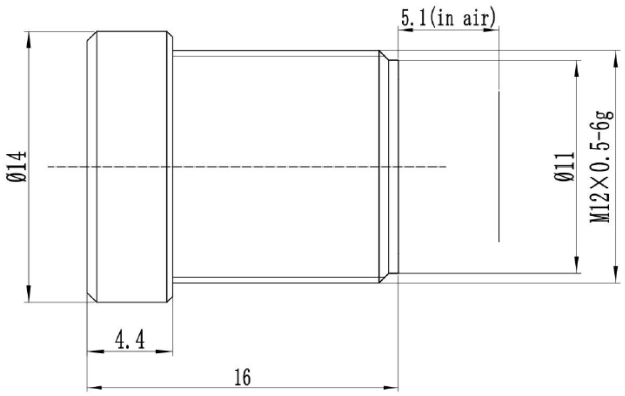

SCALE		DRAWN		MODEL	**CCL12816MP**	REV	DESCRIPTION	DATE	NAME
DATE		CHECK		TOWIN 香港致远电子集团有限公司 HONGKONG TOWIN ELECTRONICS CO.,LTD.		①			
UNIT	mm	APPROVE				②			
						③			