SPECIFICATION

IMAGE FORMAT	1/2.7"
FOCAL LENGTH	3.7mm
F.O.V.(OV2710)	120°(D)
	97°(H)
	52°(V)
TV DISTORTION	-9%
RESOLUTION	2 MP
APERTURE	F2.0
MOUNT	M12X0.5
IRIS	Fixed
FOCUS	Manual
ZOOM	Fixed
B.F.L.	5.48mm
M.O.D.	0.3m
CONSTRUCTION	6G

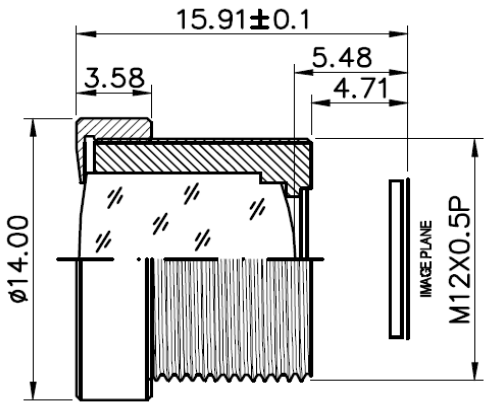

SCALE		DRAWN		MODEL	**CCL127037MP**	REV	DESCRIPTION	DATE	NAME
DATE		CHECK		TOWIN 香港致远电子集团有限公司 HONGKONG TOWIN ELECTRONICS CO.,LTD.		①			
UNIT	mm	APPROVE				②			
						③			