SPECIFICATION

IMAGE FORMAT	1/2.5"
FOCAL LENGTH	4.0mm
F.O.V.	86°(D)
	74°(H)
	60°(V)
RESOLUTION	5 MP
DISTORTION	<-0.4%
APERTURE	F2.8
MOUNT	M12x0.5
IRIS	Fixed
M.O.D.	0.1m
T.T.L.	22mm
CONSTRUCTIONS	2G2P+IR cut

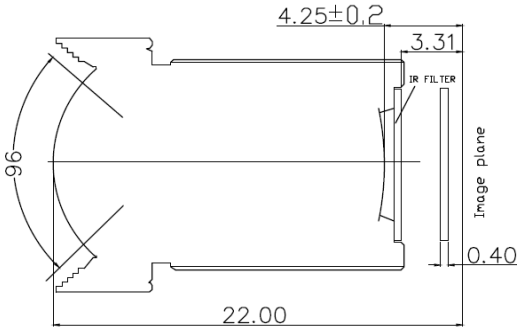

SCALE	4:1	DRAWN		MODEL	**CCL125040MPF**	REV	DESCRIPTION	DATE	NAME
DATE		CHECK		TOWIN 香港致远电子集团有限公司 HONGKONG TOWIN ELECTRONICS CO.,LTD.		①			
UNIT	mm	APPROVE				②			
						③			