SPECIFICATION

IMAGE FORMAT	1/2.3"
FOCAL LENGTH	3.65mm
F.O.V.	132°(D)
	101°(H)
	74°(V)
DISTORTION	-31%
RESOLUTION	5 MP
APERTURE	F1.8
MOUNT	M12X0.5
IRIS	Fixed
FOCUS	Manual
ZOOM	Fixed
B.F.L.	5.39mm
M.O.D.	0.3m
CONSTRUCTION	6G+IR cut

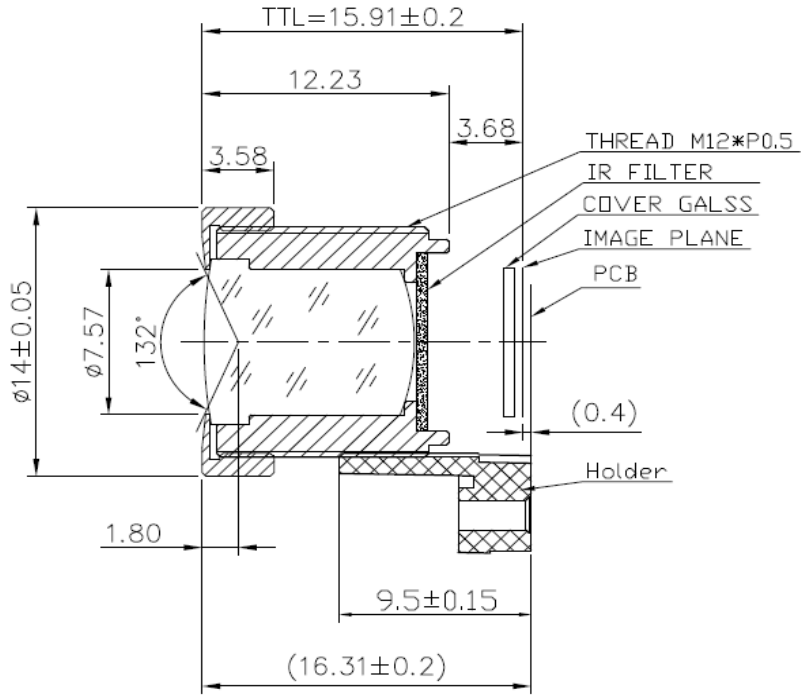

SCALE		DRAWN		MODEL	**CCL1230365MPF**	REV	DESCRIPTION	DATE	NAME
DATE		CHECK		香港致远电子集团有限公司 HONGKONG TOWIN ELECTRONICS CO.,LTD.		①			
UNIT	mm	APPROVE				②			
						③			