SPECIFICATION

IMAGE FORMAT	1/3"
FOCAL LENGTH	2.7mm
F.O.V.(OV4689)	155.2°(D)
	127°(H)
	66.5°(V)
RESOLUTION	4 Megapixel
DISTORTION	-49%
APERTURE	F2.5
MOUNT	M12X0.5
IRIS	Fixed
FOCUS	Manual
ZOOM	Fixed
B.F.L.	4.88mm
M.O.D.	0.1m
STRUCTURE	5G+IRCF

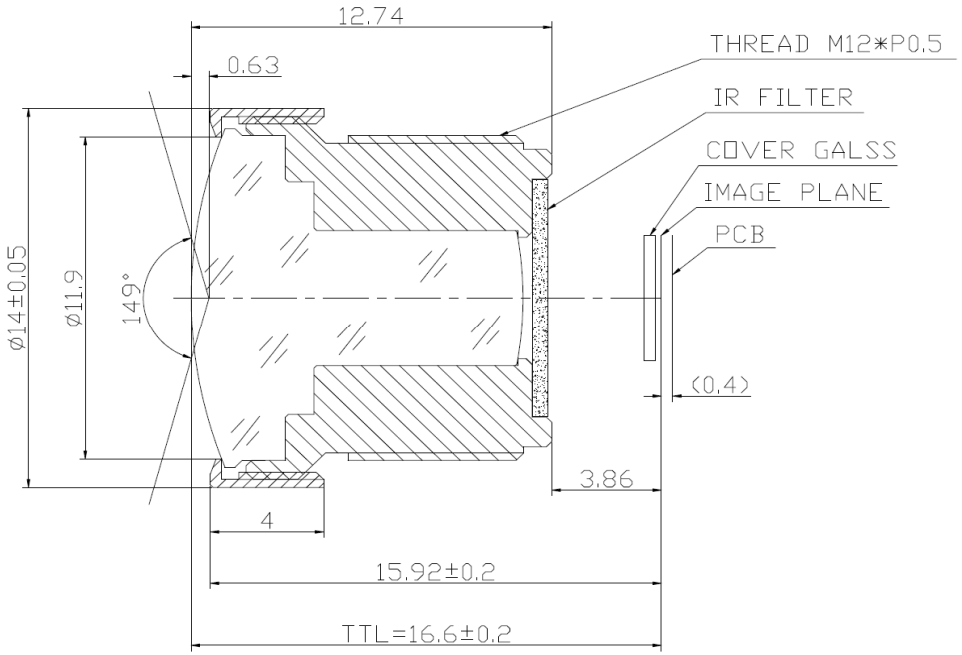

SCALE		DRAWN		MODEL	**CCL13027MPF**	REV	DESCRIPTION	DATE	NAME
DATE		CHECK		香港致远电子集团有限公司 HONGKONG TOWIN ELECTRONICS CO.,LTD.		①			
UNIT	mm	APPROVE				②			
						③			