SPECIFICATION

IMAGE FORMAT	1/3"
FOCAL LENGTH	2.1mm
F.O.V.	149°(D)
	117°(H)
	86°(V)
F.O.V.(@AR0330)	143°(D)
	109°(H)
	81°(V)
RESOLUTION	Megapixel
APERTURE	F2.5
MOUNT	M12X0.5
IRIS	Fixed
FOCUS	Manual
ZOOM	Fixed
B.F.L.	5.55mm
M.O.D.	0.1m
CONSTRUCTION	6G

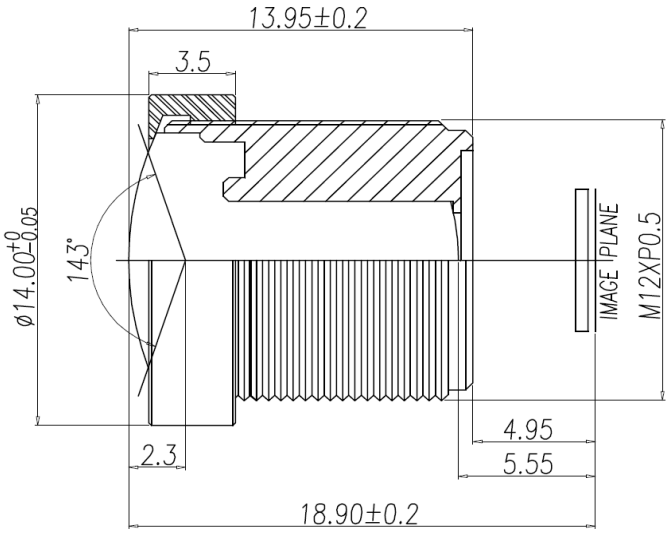

SCALE		DRAWN		MODEL	**CCL13021MPR2**	REV	DESCRIPTION	DATE	NAME
DATE		CHECK		TOWIN 香港致远电子集团有限公司 HONGKONG TOWIN ELECTRONICS CO.,LTD.		①			
UNIT	mm	APPROVE				②			
						③			